1 Comp. Loc. Transmission

Select system or component ID below to navigate to a location view.

- ⇒ “1.1 Automatic Transmission 01V”, page 2
- ⇒ “1.2 Automatic Transmission 01J”, page 8
- ⇒ “1.3 Automatic Transmission 09L”, page 12
- ⇒ “1.4 Manual Transmission”, page 15

Automatic Transmission Pressure Regulating Valve 1 -N215- ◆ Automatic transmission 01V ⇒ Item 5 (page 3) ◆ Automatic transmission 01J ⇒ Item 2 (page 9)	Automatic Transmission Hydraulic Pressure Sensor 2 -G194- ◆ Automatic transmission 01J ⇒ Item 1 (page 9)	Solenoid Valve 1 -N88- ◆ Automatic transmission 01V ⇒ Item 5 (page 3) ◆ Automatic transmission 01J ⇒ Item 2 (page 9)	Transmission Input Speed (RPM) Sensor -G182- ◆ Automatic transmission 01V ⇒ Item 10 (page 4) ◆ Automatic transmission 01J ⇒ Item 1 (page 9) ◆ Automatic transmission 09L ⇒ page 13
Automatic Transmission Pressure Regulating Valve 2 -N216- ◆ Automatic transmission 01V ⇒ Item 5 (page 3) ◆ Automatic transmission 01J ⇒ Item 2 (page 9)	Automatic Transmission Hydraulic Pressure Sensor 1 -G193- ◆ Automatic transmission 01J ⇒ Item 1 (page 9)	Solenoid Valve 2 -N89- ◆ Automatic transmission 01V ⇒ Item 5 (page 3)	Transmission Output Speed (RPM) Sensor -G195- ◆ Automatic transmission 01V ⇒ Item 11 (page 4) ◆ Automatic transmission 01J ⇒ Item 1 (page 9) ◆ Automatic transmission 09L ⇒ page 13
Automatic Transmission Pressure Regulating Valve 3 -N217- ◆ Automatic transmission 01V ⇒ Item 5 (page 3)	Multi-Function Transmission Range (TR) Switch -F125- ◆ Automatic transmission 01V ⇒ Item 6 (page 4) ◆ Automatic transmission 01J ⇒ Item 1 (page 9) ◆ Automatic transmission 09L ⇒ page 13	Solenoid Valve 3 -N90- ◆ Automatic transmission 01V ⇒ Item 5 (page 3)	Transmission Output Speed (RPM) Sensor 2 -G196- ◆ Automatic transmission 01J ⇒ Item 1 (page 9)

protected by copyright. Copying for private or commercial purposes, in part or in whole, is not permitted unless authorised by AUDI AG. AUDI AG does not guarantee or accept any liability with respect to correctness of information in this document. Copyright by AUDI AG.

Automatic Transmission Pressure Regulating Valve 4 -N218- ◆ Automatic transmission 01V ⇒ Item 5 (page 3)	Shift Lock Solenoid -N110- ◆ Automatic transmission 01V ⇒ Item 3 (page 3) ◆ Automatic transmission 01J ⇒ Item 5 (page 10) ◆ Automatic transmission 09L ⇒ page 14	Tiptronic Switch -F189- ◆ Automatic transmission 01V ⇒ Item 8 (page 4) ◆ Automatic transmission 01J ⇒ Item 4 (page 10) ◆ Automatic transmission 09L ⇒ page 14	Transmission Fluid Temperature Sensor -G93- ◆ Automatic transmission 01V ⇒ Item 4 (page 3) ◆ Automatic transmission 01J ⇒ Item 1 (page 9)

1.1 Automatic Transmission 01V

Protected by copyright. Copying for private or commercial purposes, in part or in whole, is not permitted unless authorised by AUDI AG. AUDI AG does not guarantee or accept any liability with respect to the correctness of information in this document. Copyright by AUDI AG.

1 - Transmission Control Module (TCM) -J217-
- ❑ Located under the plenum chamber cover

2 - Data Link Connector (DLC)
- ❑ Located under the dash panel on the driver side

3 - Shift Lock Solenoid -N110- ⇒ page 5
- ❑ Located in the shift mechanism

4 - Wiring harness in transmission ⇒ page 5
- ❑ Integrated with Transmission Fluid Temperature Sensor -G93-
- ❑ The wiring harness is attached to the valve body.

5 - Valve Body ⇒ page 6
- ❑ The valve body is bolted to the underside of transmission housing and is covered by the transmission oil pan

The following are attached to the valve body:
- ♦ Solenoid Valve 1 -N88-
- ♦ Solenoid Valve 2 -N89-
- ♦ Solenoid Valve 3 -N90-
- ♦ Automatic Transmission Pressure Regulating Valve 1 -N215-
- ♦ Automatic Transmission Pressure Regulating Valve 2 -N216-
- ♦ Automatic Transmission Pressure Regulating Valve 3 -N217-
- ♦ Automatic Transmission Pressure Regulating Valve 4 -N218-

Protected by copyright. Copying for private or commercial purposes, in part or in whole, is not permitted unless authorised by AUDI AG. AUDI AG does not guarantee or accept any liability with respect to the correctness of information in this document. Copyright by AUDI AG.

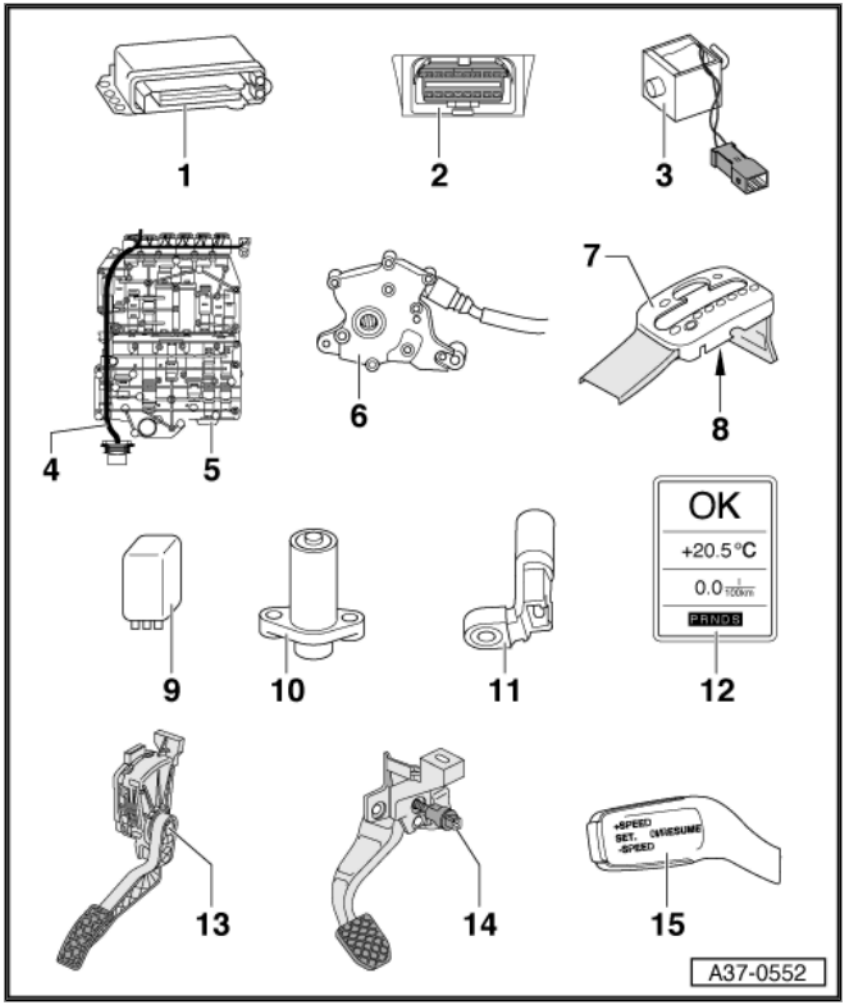

Automatic transmission 01V continued

6 - Multi-Function Transmission Range (TR) Switch -F125- ⇒ page 6
- ❑ Located on the left side of the transmission

7 - Selector mechanism cover

8 - Tiptronic Switch -F189- ⇒ page 7
- ❑ Integrated in the printed circuit board in the symbol panel located in the shift mechanism cover

9 - Starter Interlock Alarm System Relay -J60-
- ❑ Not installed on all engines
- ❑ Located on the relay carrier in E-box, plenum chamber

10 - Transmission Input Speed (RPM) Sensor -G182- ⇒ page 7
- ❑ Attached to the transmission housing behind the valve body

11 - Transmission Output Speed (RPM) Sensor -G195- ⇒ page 8
- ❑ Located right rear of the transmission

12 - Transmission Range (TR) Display -Y6-
- ❑ Integrated into the instrument cluster

13 - Kick Down Switch -F8-
- ❑ Part of the accelerator pedal module

14 - Brake Light Switch -F-
- ❑ Located in the foot pedal assembly.

15 - Cruise Control Switch -E45-
- ❑ Located on the steering column switch.

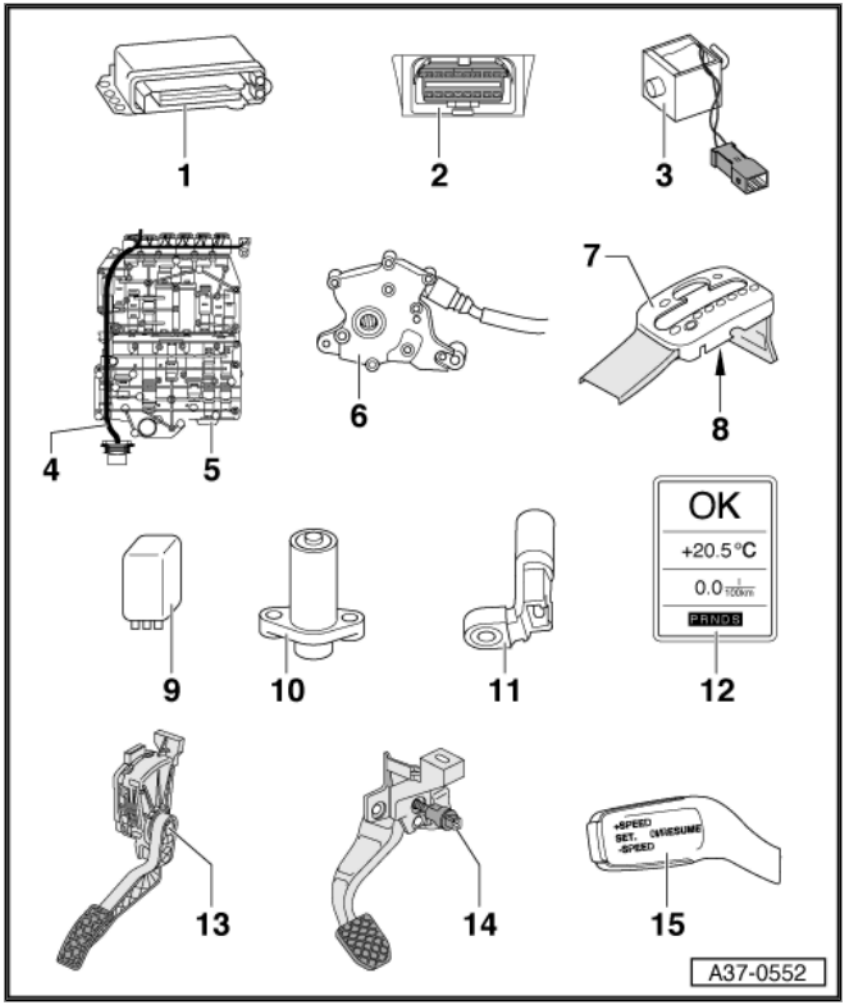

Protected by copyright. Copying for private or commercial purposes, in part or in whole, is not permitted unless authorised by AUDI AG. AUDI AG does not guarantee or accept any liability with respect to the correctness of information in this document. Copyright by AUDI AG.

Shift Lock Solenoid

Arrow - Shift Lock Solenoid -N110-

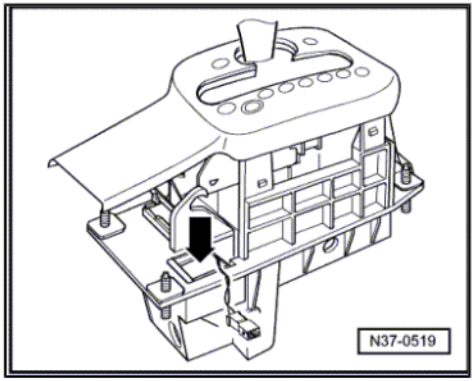

Wiring Harness with Transmission Fluid Temperature Sensor - G93-

B - Wiring Harness with Transmission Fluid Temperature Sensor -G93-

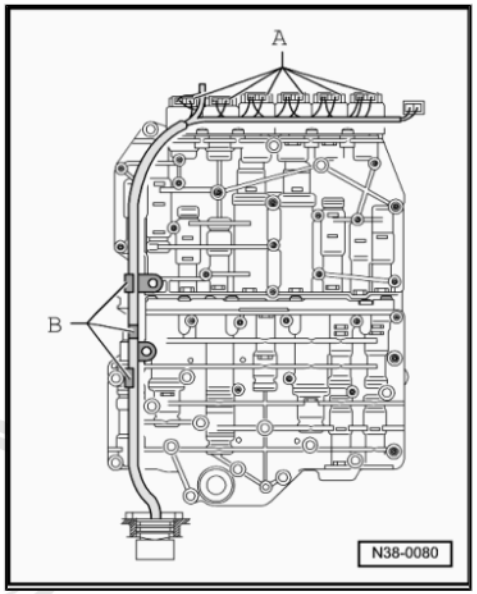

Protected by copyright. Copying for private or commercial purposes, in part or in whole, is not permitted unless authorised by AUDI AG. AUDI AG does not guarantee or accept any liability with respect to the correctness of information in this document. Copyright by AUDI AG.

Valve Body

- - Valve Body

The following are attached to the valve body:

- Solenoid Valve 1 -N88-
- Solenoid Valve 2 -N89-
- Solenoid Valve 3 -N90-
- Automatic Transmission Pressure Regulating Valve 1 -N215-
- Automatic Transmission Pressure Regulating Valve 2 -N216-
- Automatic Transmission Pressure Regulating Valve 3 -N217-
- Automatic Transmission Pressure Regulating Valve 4 -N218-

Protected by copyright. Copying for private or commercial
permitted unless authorised by AUDI AG. AUDI AG does
with respect to the correctness of information in this do

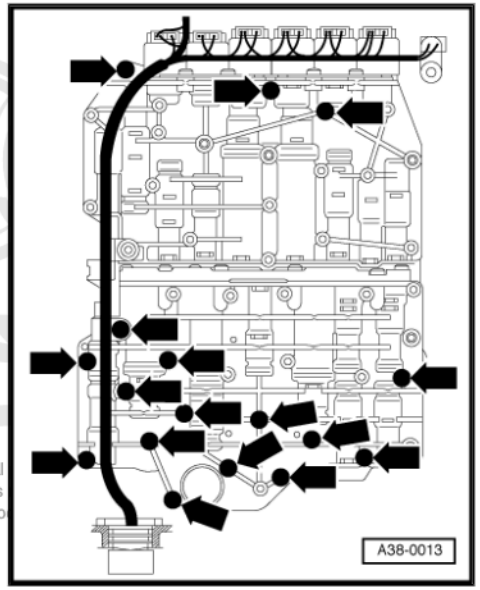

Multi-Function Transmission Range Switch

Arrow - Multi-Function Transmission Range (TR) Switch -F125- connector

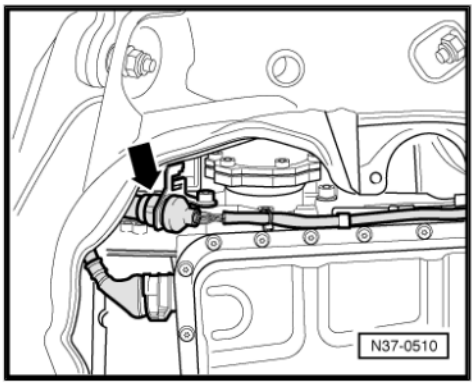

Tiptronic Switch

- - Tiptronic Switch -F189-

Tiptronic Switch -F189- consists of 3 hall sensors:

– A. Tip-down sensor
– B. Sensor for Tiptronic recognition
– C. Tip-up sensor

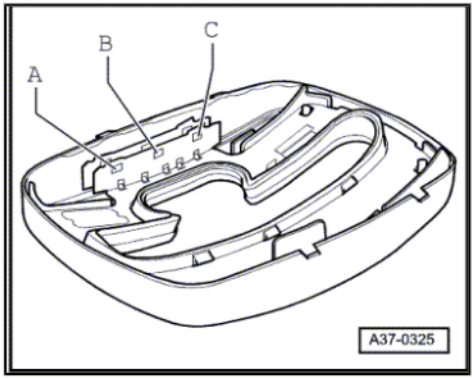

Transmission Input Speed (RPM) Sensor

A - Transmission Input Speed (RPM) Sensor -G182-

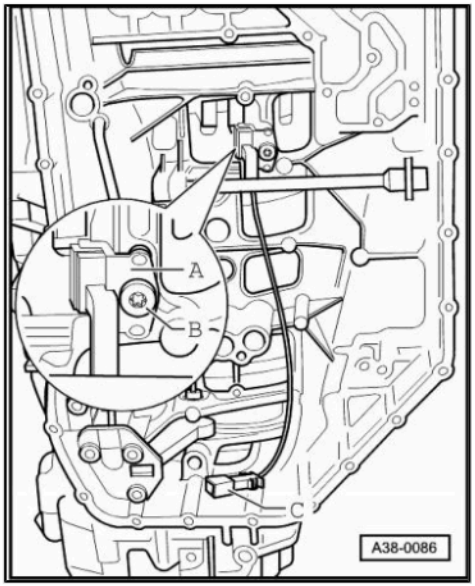

Protected by copyright. Copying for private or commercial purposes, in part or in whole, is not permitted unless authorised by AUDI AG. AUDI AG does not guarantee or accept any liability with respect to the correctness of information in this document. Copyright by AUDI AG.

Transmission Output Speed (RPM) Sensor

- - Transmission Output Speed (RPM) Sensor -G195-

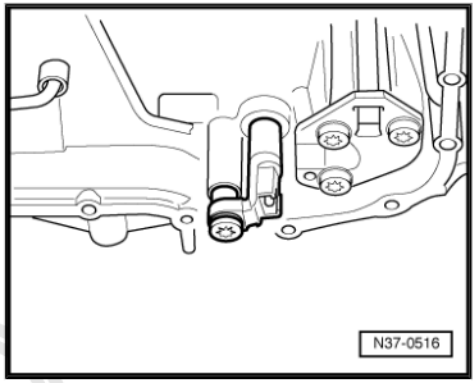

1.2 Automatic Transmission 01J

Protected by copyright. Copying for private or commercial purposes, in part or in whole, is not permitted unless authorised by AUDI AG. AUDI AG does not guarantee or accept any liability with respect to the correctness of information in this document. Copyright by AUDI AG.

1 - Transmission Control Module (TCM) -J217- ⇒ page 11

- ❑ Located on the back end of the transmission secured directly to the hydraulic control module.

The following components are integrated in the control module:

- ♦ Transmission Output Speed (RPM) Sensor -G195- and Transmission Output Speed (RPM) Sensor 2 -G196-
- ♦ Transmission Fluid Temperature Sensor -G93-
- ♦ Multi-Function Transmission Range (TR) Switch -F125-
- ♦ Transmission Input Speed (RPM) Sensor -G182-
- ♦ Automatic Transmission Hydraulic Pressure Sensor 1 -G193-
- ♦ Automatic Transmission Hydraulic Pressure Sensor 2 -G194-

2 - Hydraulic control module ⇒ page 11

- ❑ Bolted to the back end of the transmission

The following valves are integrated into the hydraulic control module:

- ♦ Automatic Transmission Pressure Regulating Valve 1 -N215-
- ♦ Automatic Transmission Pressure Regulating Valve 2 -N216-
- ♦ Solenoid Valve 1 -N88-

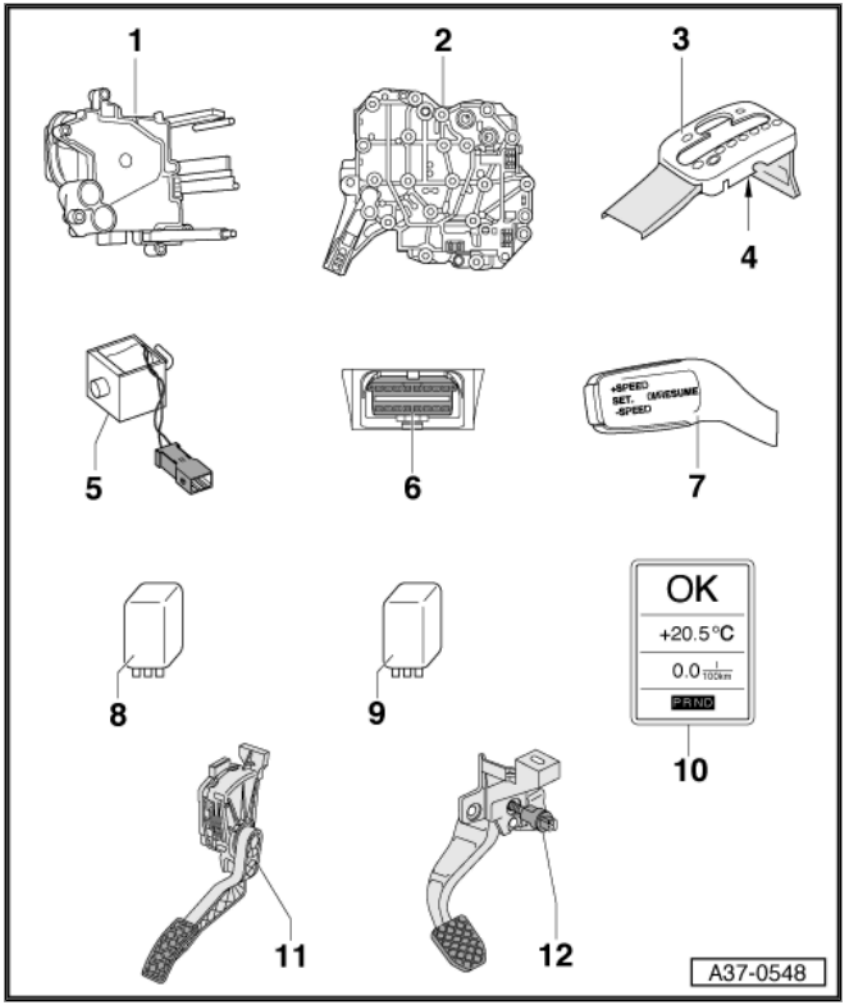

Protected by copyright. Copying for private or commercial purposes, in part or in whole, is not permitted unless authorised by AUDI AG. AUDI AG does not guarantee or accept any liability with respect to the correctness of information in this document. Copyright by AUDI AG.

Automatic transmission 01J continued

3 - Shift mechanism cover

4 - Tiptronic Switch -F189- ⇒ page 11

- ❑ Integrated into the circuit board in the shift mechanism cover

5 - Shift Lock Solenoid -N110- ⇒ page 12

- ❑ Located in the shift mechanism

6 - Data Link Connector (DLC)

- ❑ Located beneath the knee bolster on the left of the steering wheel

7 - Cruise Control Switch -E45-

- ❑ Located on the steering column switch

8 - Park/Neutral Position (PNP) Relay -J226- (through 10.2004) or Starting Interlock Relay -J207- (from 11.2004)

- ❑ Located on the relay carrier in the E-box plenum chamber

9 - Starter Interlock Alarm System Relay -J60-

- ❑ Located on the relay carrier in the E-box plenum chamber

Protected by copyright. Copying for private or commercial purposes, in part or in whole, is not permitted unless authorised by AUDI AG. AUDI AG does not guarantee or accept any liability with respect to the correctness of information in this document. Copyright by AUDI AG.

10 - Transmission Range (TR) Display -Y6-

- ❑ Integrated in the instrument cluster

11 - Kick Down Switch -F8-

- ❑ Integrated in the accelerator pedal module

12 - Brake Light Switch -F-

- ❑ Located in the brake pedal assembly

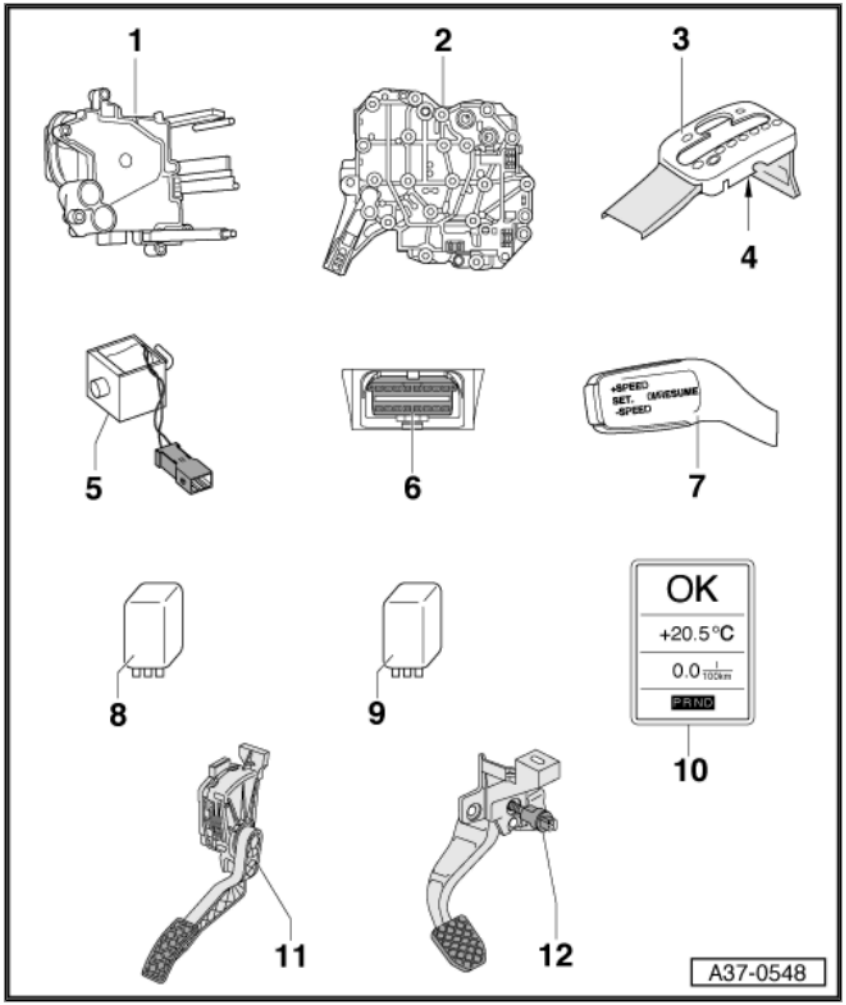

Transmission Control Module (TCM)

- - Transmission Control Module (TCM) -J217-

The following components are integrated in the control module:

– A. Transmission Output Speed (RPM) Sensor -G195- and Transmission Output Speed (RPM) Sensor 2 -G196-

– B. Transmission Fluid Temperature Sensor -G93-

– C. Multi-Function Transmission Range (TR) Switch -F125-

– D. Transmission Input Speed (RPM) Sensor -G182-

– E. Automatic Transmission Hydraulic Pressure Sensor 1 -G193-

– F. Automatic Transmission Hydraulic Pressure Sensor 2 -G194-

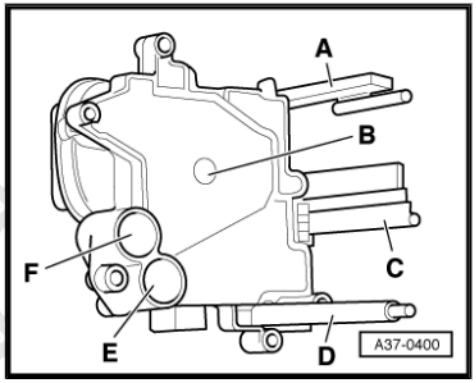

Hydraulic Control Module

- - Hydraulic Control Module

– A. Harness connector for Automatic Transmission Pressure Regulating Valve 1 -N215-

– B. Harness connector for Automatic Transmission Pressure Regulating Valve 2 -N216-

– C. Harness connector for Solenoid Valve 1 -N88-

Protected by copyright. Copying for private or commercial pu
permitted unless authorised by AUDI AG. AUDI AG does no
with respect to the correctness of information in this docu

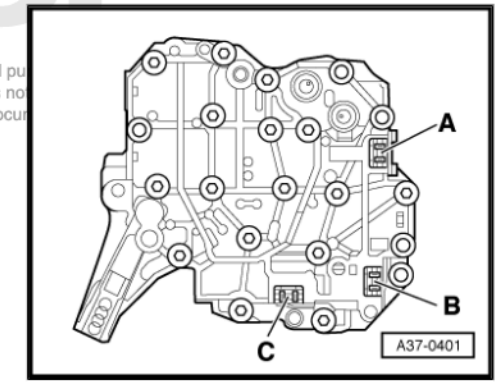

Tiptronic Switch

- - Tiptronic Switch -F189-

– Integrated into the circuit board in the shift mechanism cover

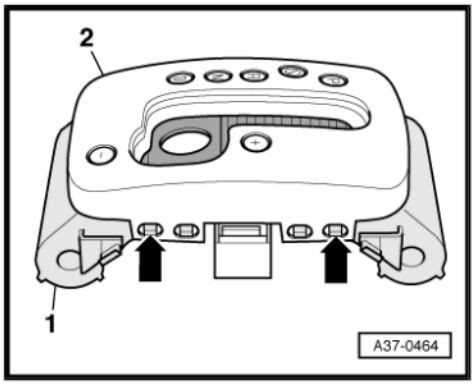

Shift Lock Solenoid

Arrow - Shift Lock Solenoid -N110-

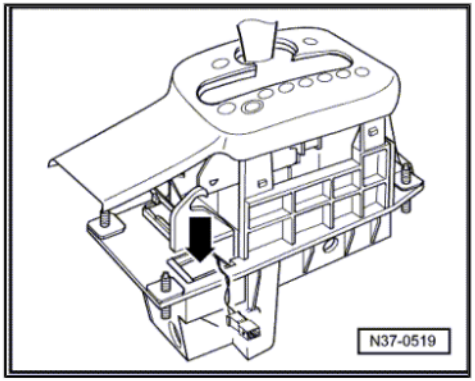

1.3 Automatic Transmission 09L

Data Link Connector (DLC)

- - Data Link Connector (DLC)

– Located beneath the knee bolster left of steering wheel

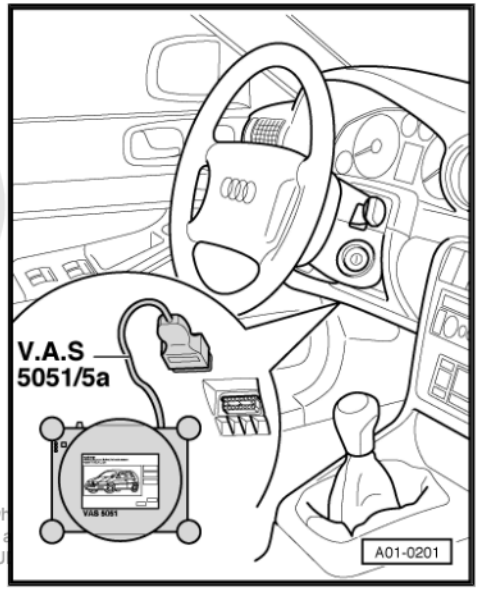

Protected by copyright. Copying for private or commercial purposes, in part or in wh
permitted unless authorised by AUDI AG. AUDI AG does not guarantee or accept a
with respect to the correctness of information in this document. Copyright by AU

Mechatronic Unit

- - Mechatronic Unit

– Bolted to the underside of the transmission housing and is covered by the transmission oil pan

The mechatronic unit incorporates the following:

- A/C Programmer -J127-
- Multi-Function Transmission Range (TR) Switch -F125-
- Transmission Input Speed (RPM) Sensor -G182-
- Transmission Output Speed (RPM) Sensor -G195-

Protected by copyright. Copying for private or commercial purposes, in part or in whole, is not permitted unless authorised by AUDI AG. AUDI AG does not guarantee or accept any liability with respect to the correctness of information in this document. Copyright by AUDI AG.

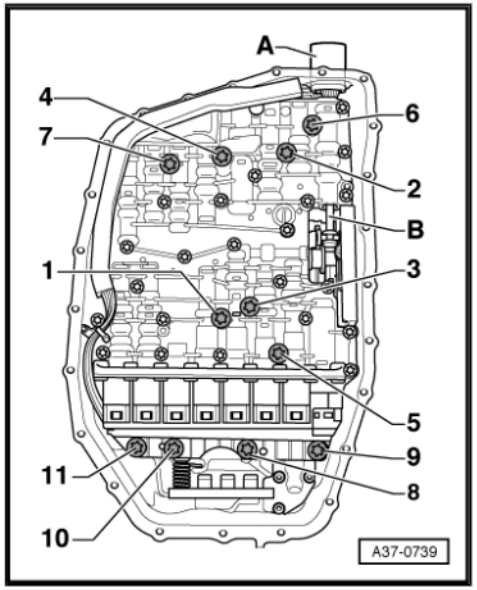

Internal transmission wiring harness

The wiring harness -A- with connector -C- is attached to the mechatronic unit -B-.

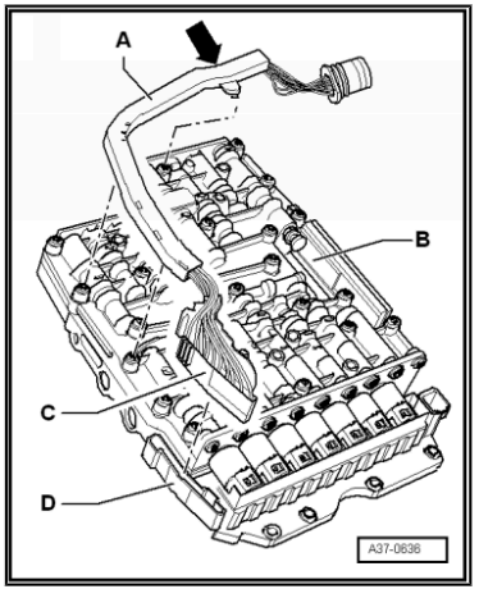

Tiptronic Switch

1 - Tiptronic Switch -F189-

– Integrated into the circuit board -1-

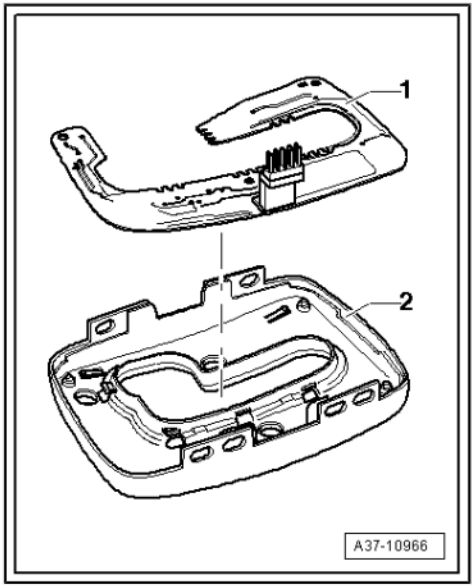

Shift Mechanism Assembly Overview

4 - Selector mechanism function unit

5 - Shift Lock Solenoid -N110-

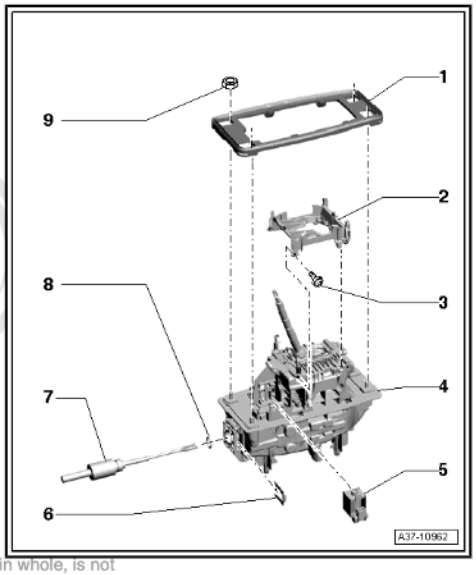

Protected by copyright. Copying for private or commercial purposes, in part or in whole, is not permitted unless authorised by AUDI AG. AUDI AG does not guarantee or accept any liability with respect to the correctness of information in this document. Copyright by AUDI AG.

1.4 Manual Transmission

Back-Up Light Switch

Arrow - Back-Up Light Switch -F4-

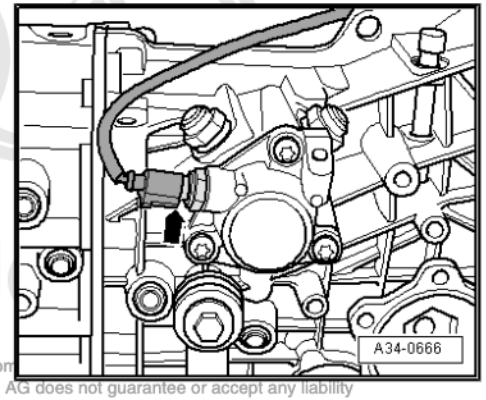

Protected by copyright. Copying for private or com
permitted unless authorised by AUDI AG. AUDI AG does not guarantee or accept any liability
with respect to the correctness of information in this document. Copyright by AUDI AG.

Clutch Pedal Starter Interlock Switch

2 - Clutch Pedal Starter Interlock Switch -F194-

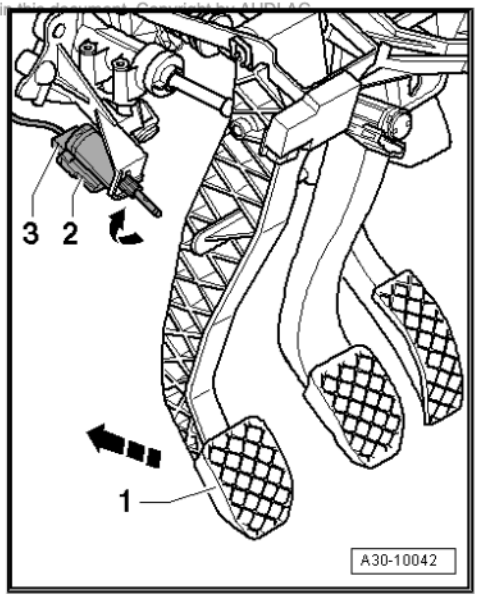

Clutch Pedal Switch

1 - Clutch Pedal Switch -F36-

2 - Brake Light Switch -F- and Brake pedal switch -F47-

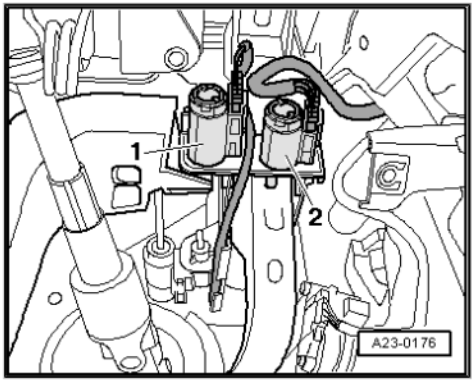

Protected by copyright. Copying for private or commercial purposes, in part or in whole, is not permitted unless authorised by AUDI AG. AUDI AG does not guarantee or accept any liability with respect to the correctness of information in this document. Copyright by AUDI AG.